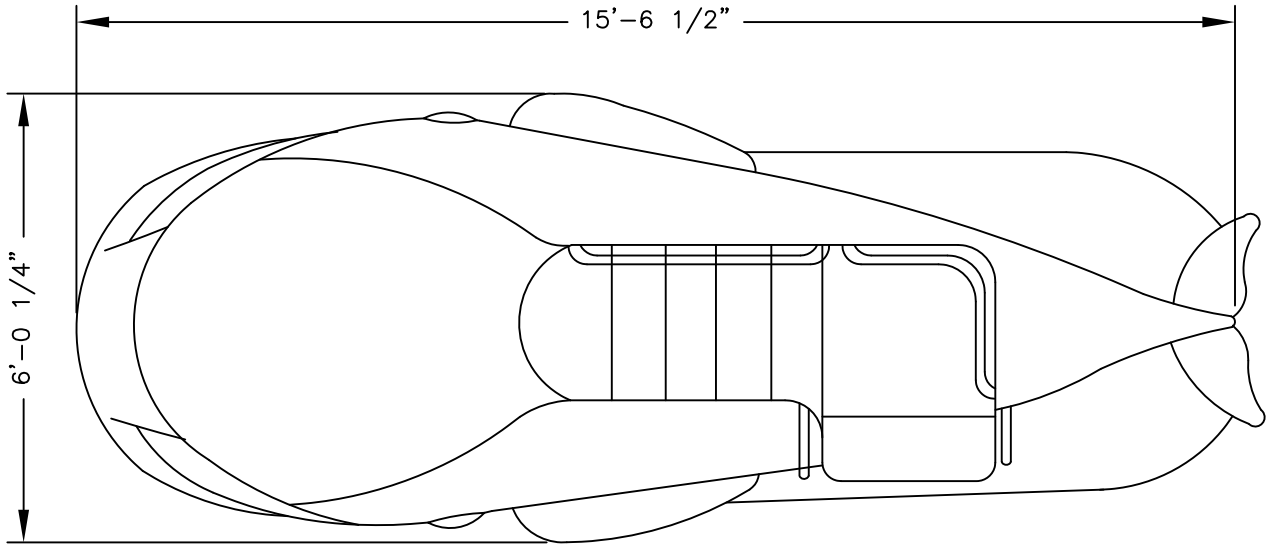

Wilmer the Whale

FEATURES

DESCRIPTION	SUPPLY LINE	GPM
WILLY the WHALE	3/4"	15

PRELIMINARY LAYOUT – FOR REVIEW AND APPROVAL ONLY.
NOT FOR CONSTRUCTION

CONFIDENTIAL – PROPERTY OF USA SLIDE, INC

USA SLIDE

USA SLIDE, INC
1180 AIRPORT PARKWAY
GAINESVILLE, GEORGIA
30501 USA

PHONE: 770 297 1551
1 800 872 7543
FAX: 770 297 9633
www.usaslide.com

Liqua–Phyd–Phun Series

MODEL	DRAWN BY	DWG. DATE
USAS–WWHL	RLP	Jan, 01, 2008
DWG SCALE	REVISION	DWG. NO.
3/8" = 1'–0"	0	USASWWHL